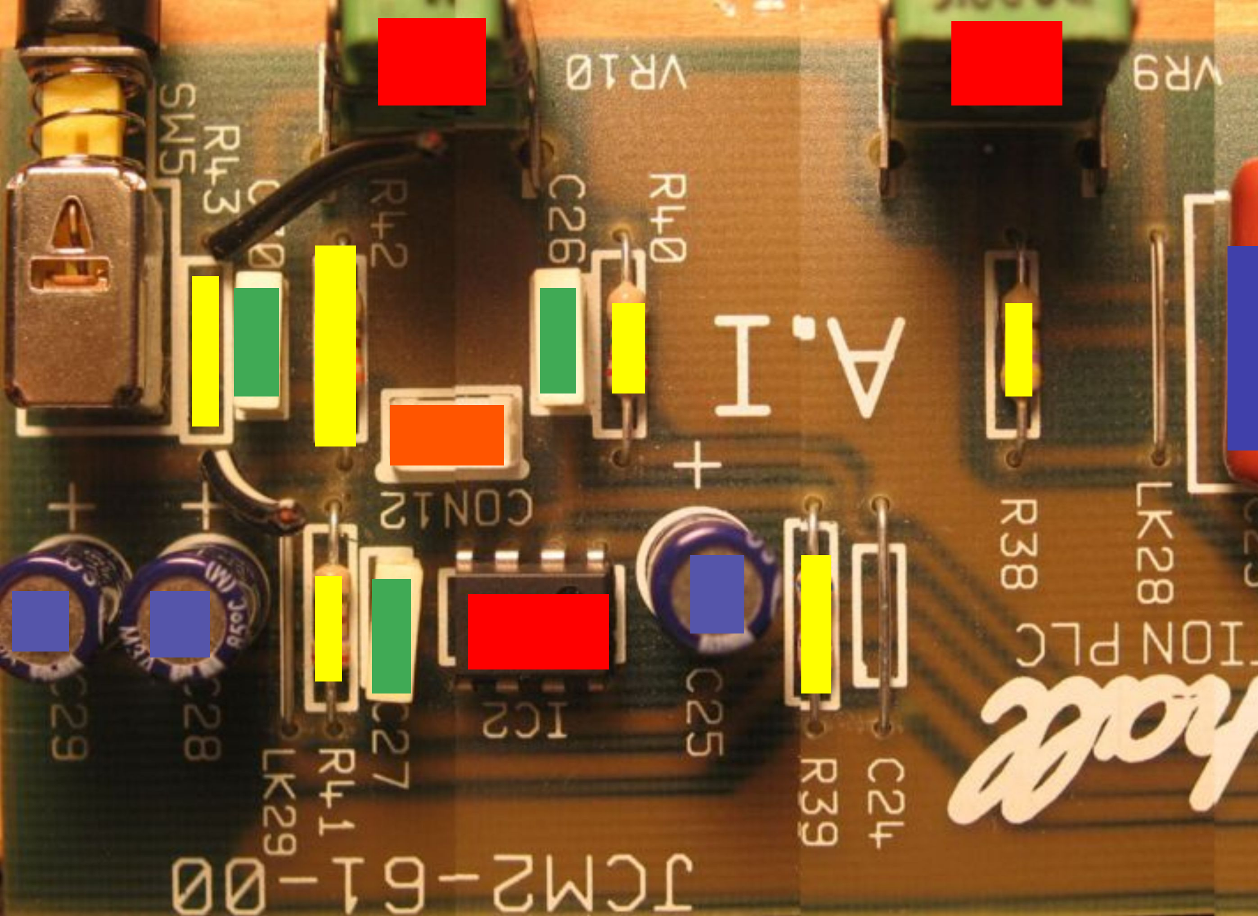
VR10
VR9
SW5
R43
R42
C26
R40
CON12
R38
LK28
C29
C28
LK29
R41
C27
IC2
C25
R39
C24
JCM2-61-00

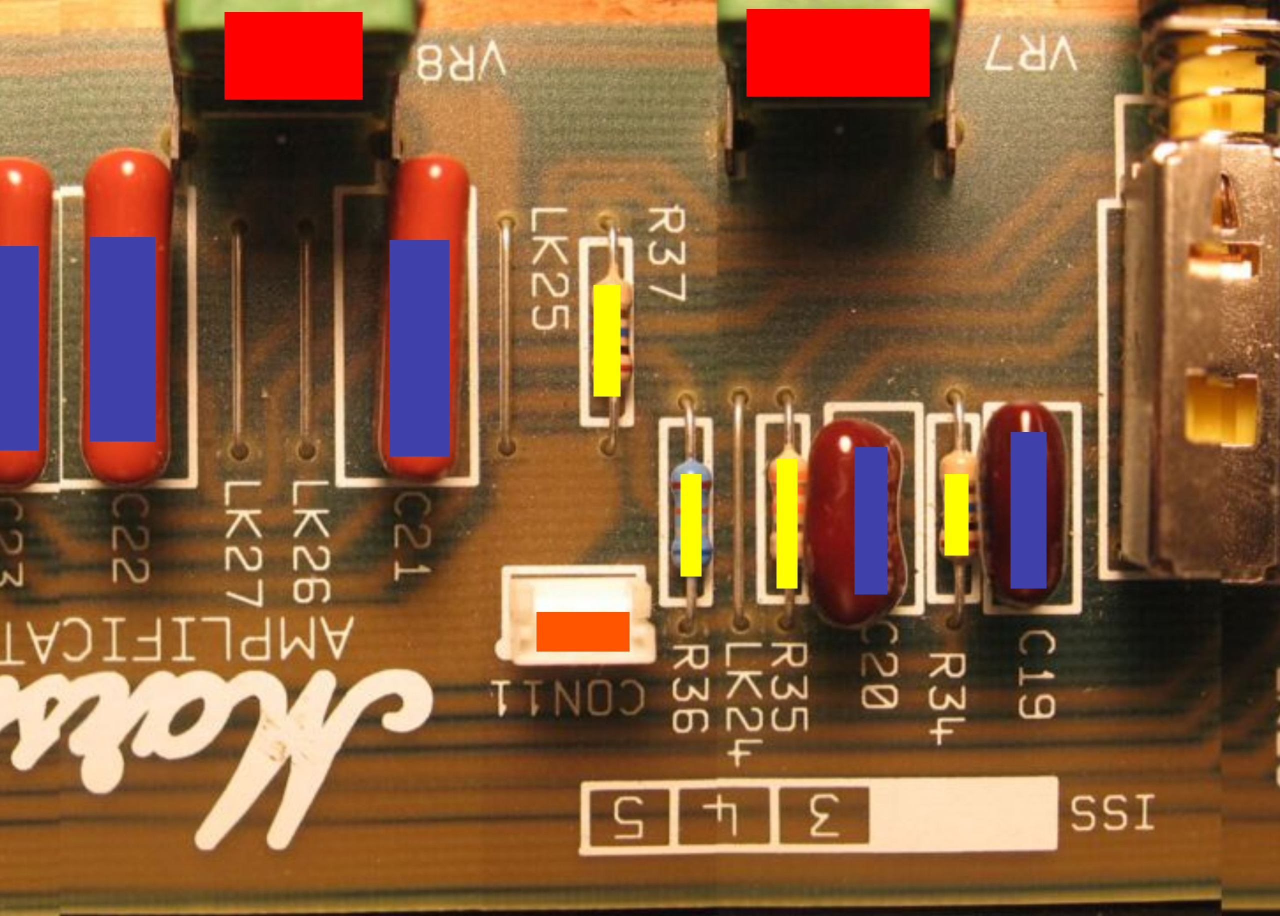
VR8
VR7
R37
LK25
C23
C22
LK27
LK26
C21
AMPLIFICAT
CON1
R36
LK24
R35
C20
R34
C19
5
4
3
ISS

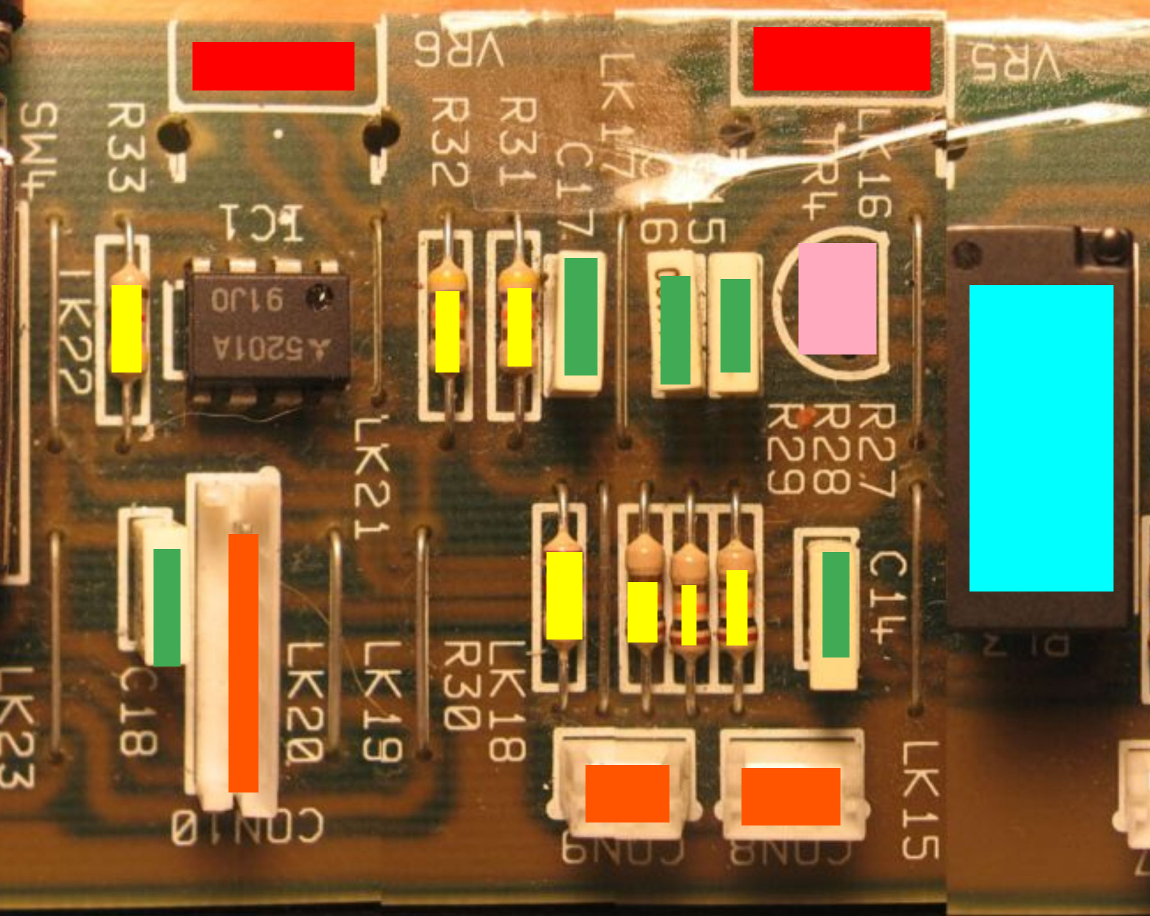
VR6
VR5
SW4
R33
IC1
5201A
910J
R32
R31
C17
LK17
LK16
TR4
LK22
LK21
R27
R28
R29
C18
CON10
LK20
LK19
R30
LK18
C14
LK15
LK23
CON9
CON8

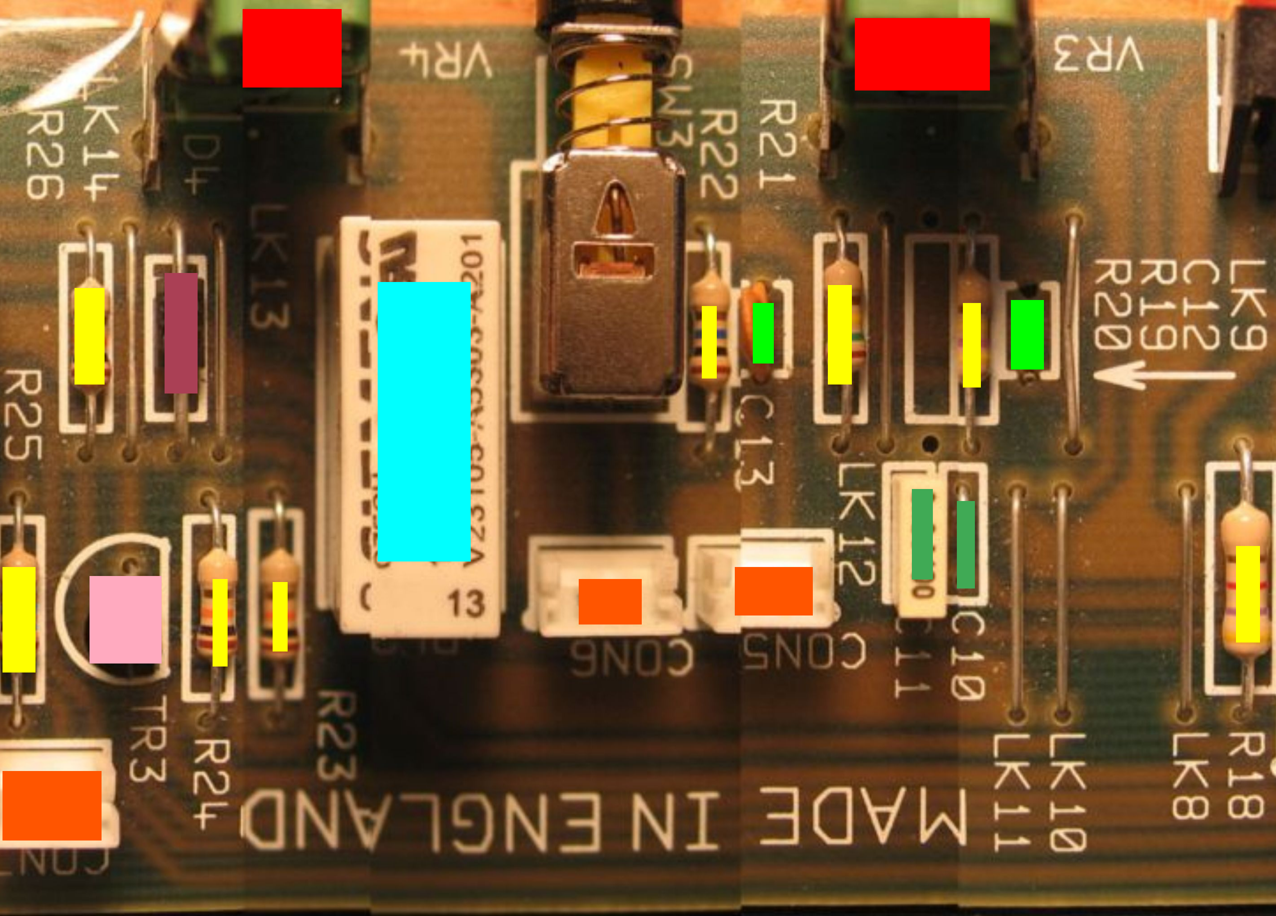
VR4
SW3
VR3
LK14
R26
D4
LK13
R22
R21
LK9
C12
R19
R20
R25
C13
LK12
C11
C10
13
CON6
CON5
TR3
R24
R23
LK11
LK10
LK8
R18
MADE IN ENGLAND

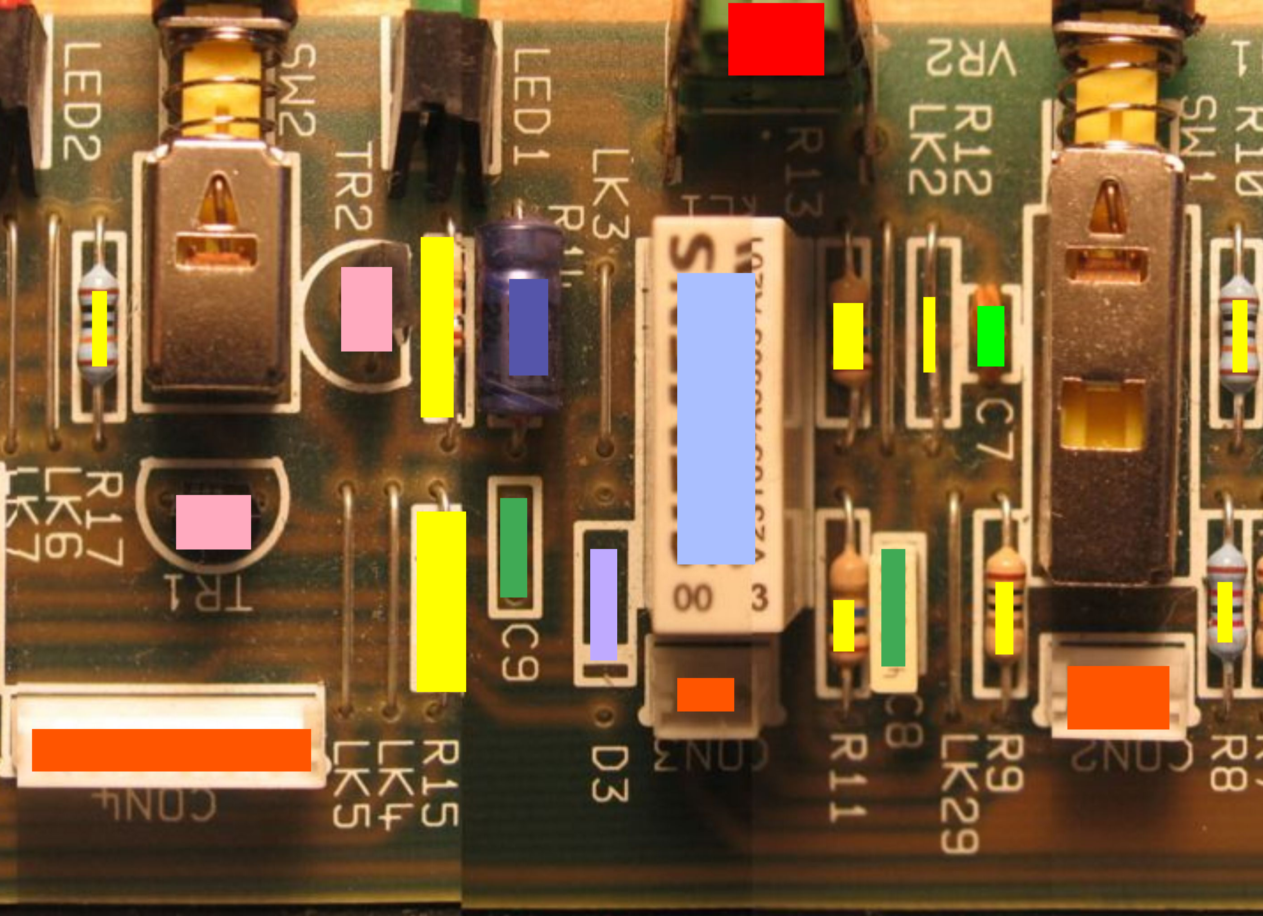
LED2
SW2
TR2
LED1
LK3
R14
R13
VR2
R12
LK2
SW1
R10
R17
LK6
LK7
TR1
C9
D3
C7
00 3
CON3
R11
C8
LK29
R9
CON2
R8
R15
LK4
LK5
CON4

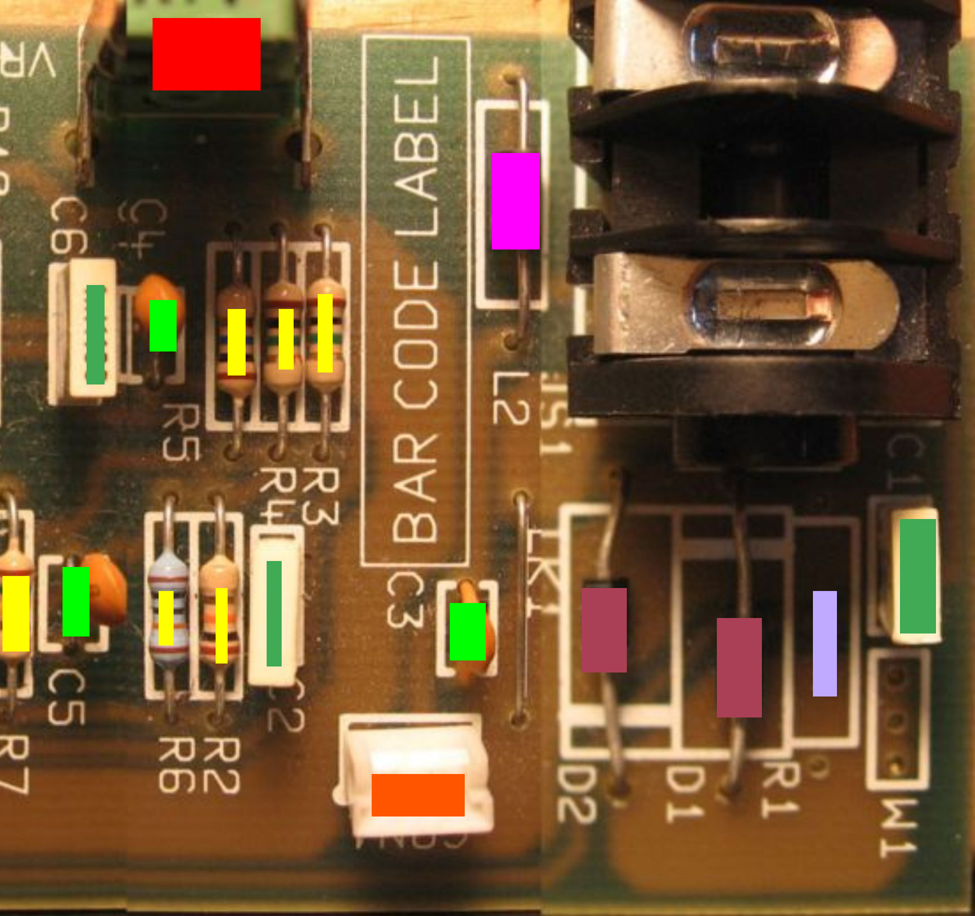
VR
C6
C4
R5
R4
R3
BAR CODE LABEL
L2
C1
LK1
C3
C2
C5
R7
R6
R2
D2
D1
R1
W1